Robot Procedure 2016_023	Sep 18th 2015
Procedure for Robot Wrist Axis replacement	Applicable for R2000iB Series Robot Models

Wrist Axis Replacement in R2000iB165x/210x Series Robots

Please practise all safety measures while working on Robot's

R2000iB Robot Model

R2000iB/165R

R2000iB/165F

R2000iB/210R

R2000iB/210F

R2000iB Robot Shipment Support

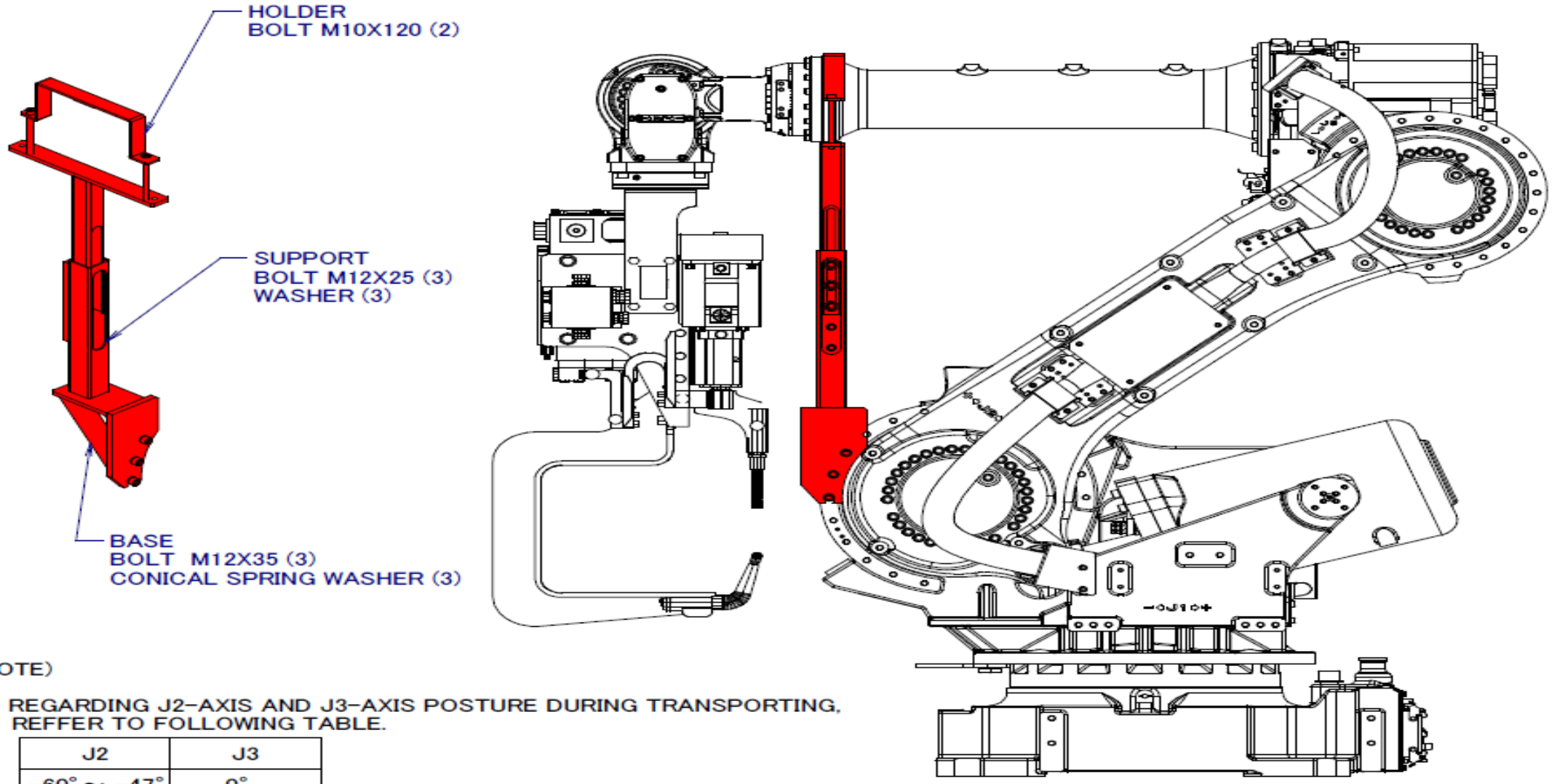

NOTE)

1) REGARDING J2-AXIS AND J3-AXIS POSTURE DURING TRANSPORTING, REFFER TO FOLLOWING TABLE.

J2	J3
−60° ～ −47°	0°

2) SUPPORT MUST BE FIXED TO HOLDER BY USING 3 BOLTS.

3) BOLTS MUST BE TIGHTENED WITH TIGHTEINING TORQUE 94Nm(9.6kgfm).

R2000iB Robot Shipment Support

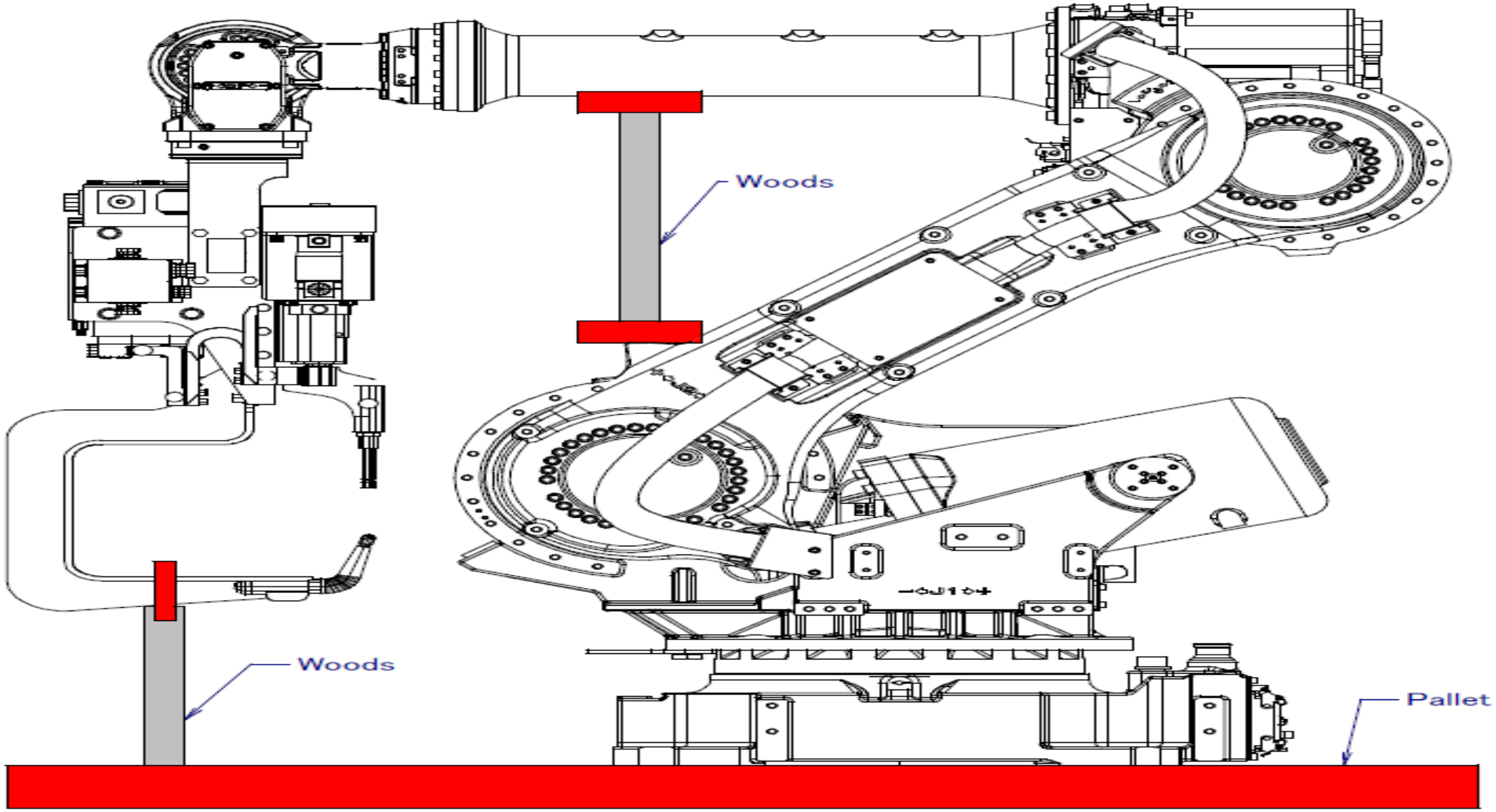

R2000iB/210F & R2000iB/165F Robot Mastering Position

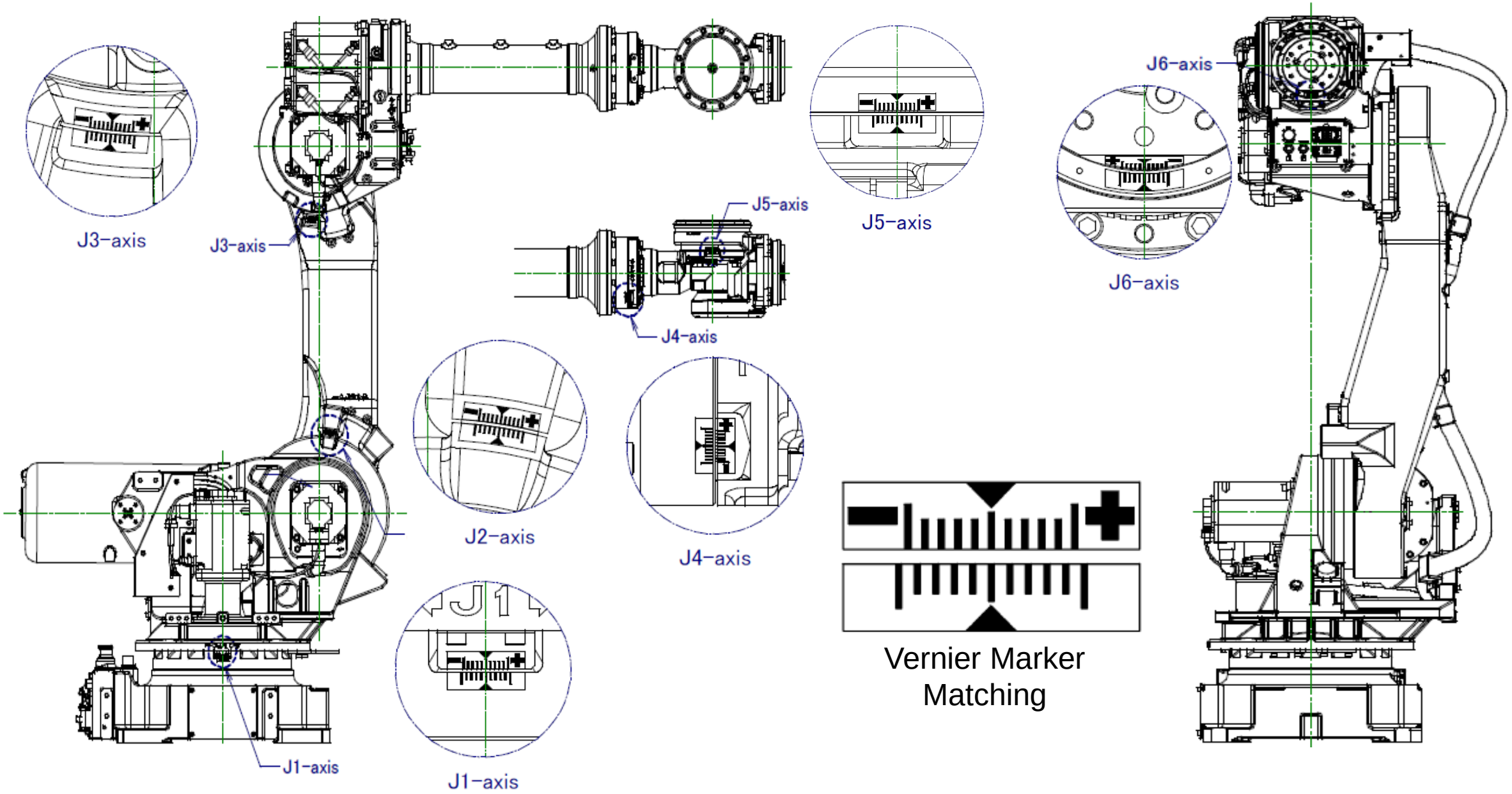

R2000iB/210R & R2000iB/165R Robot Mastering Position

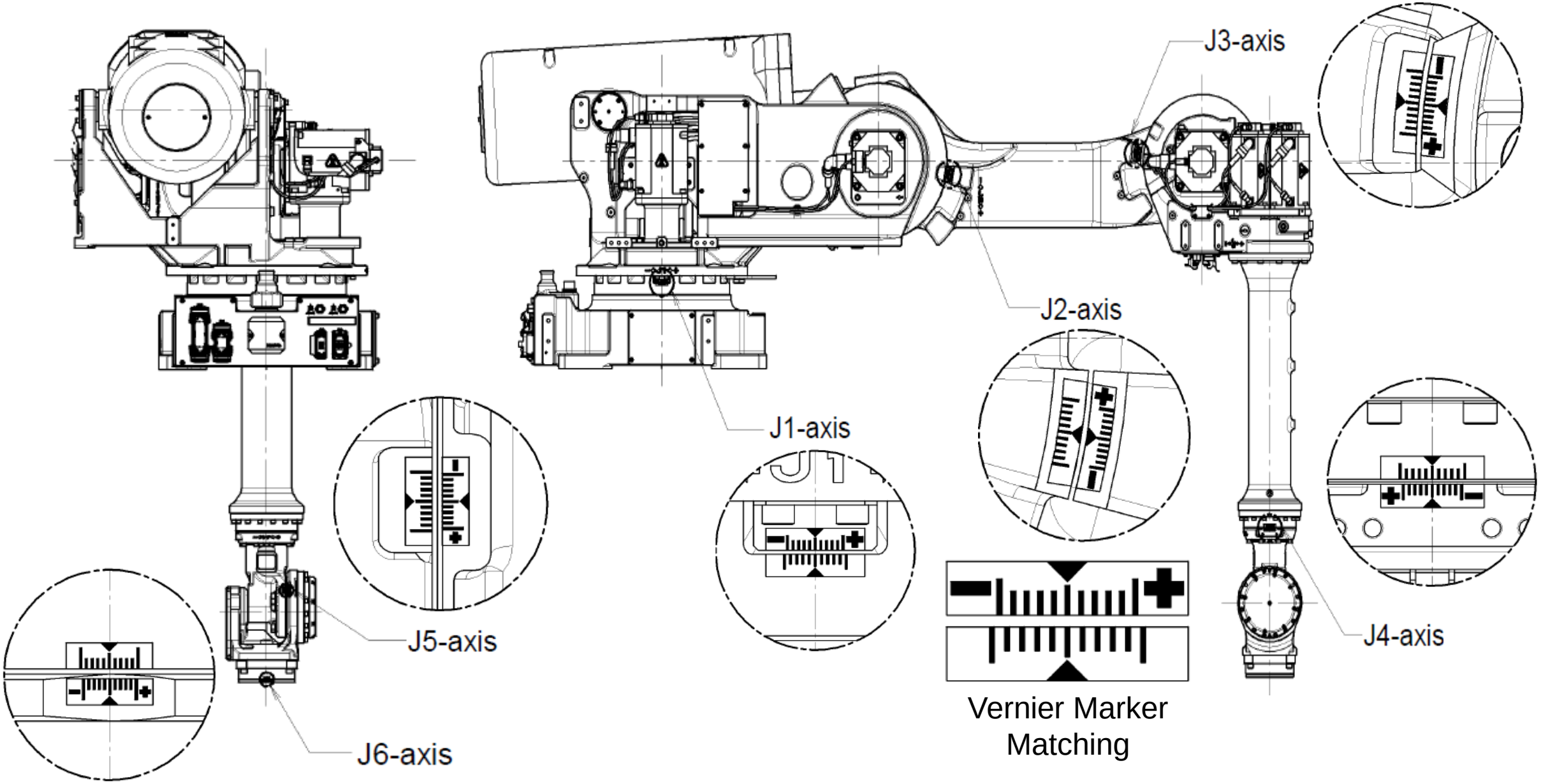

R2000iB/210x & R2000iB/165x Wrist Unit Orientation

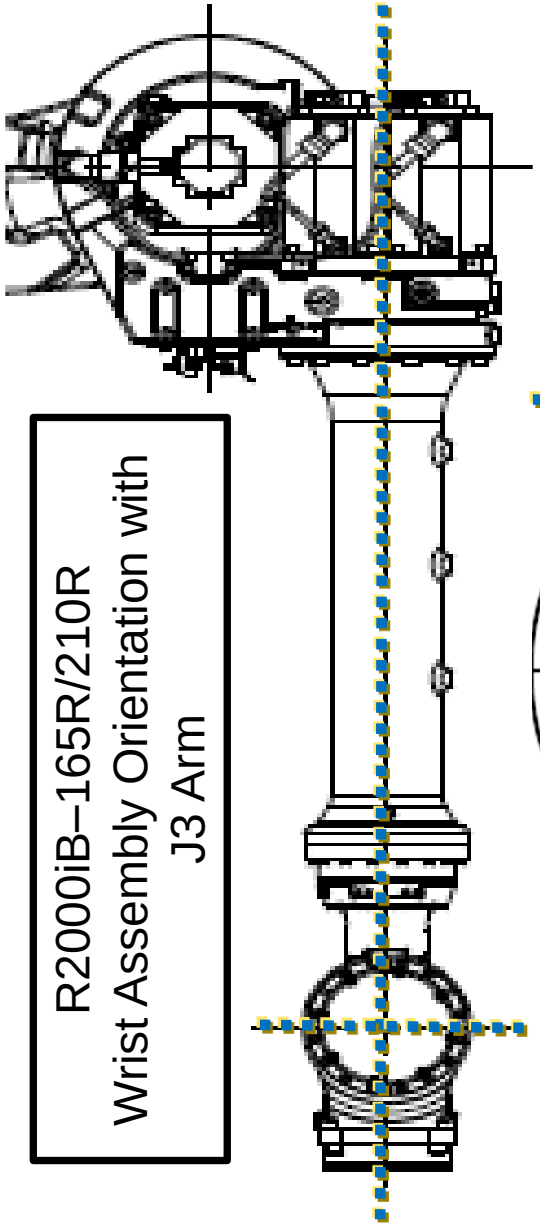

R2000iB–165R/210R
Wrist Assembly Orientation with J3 Arm

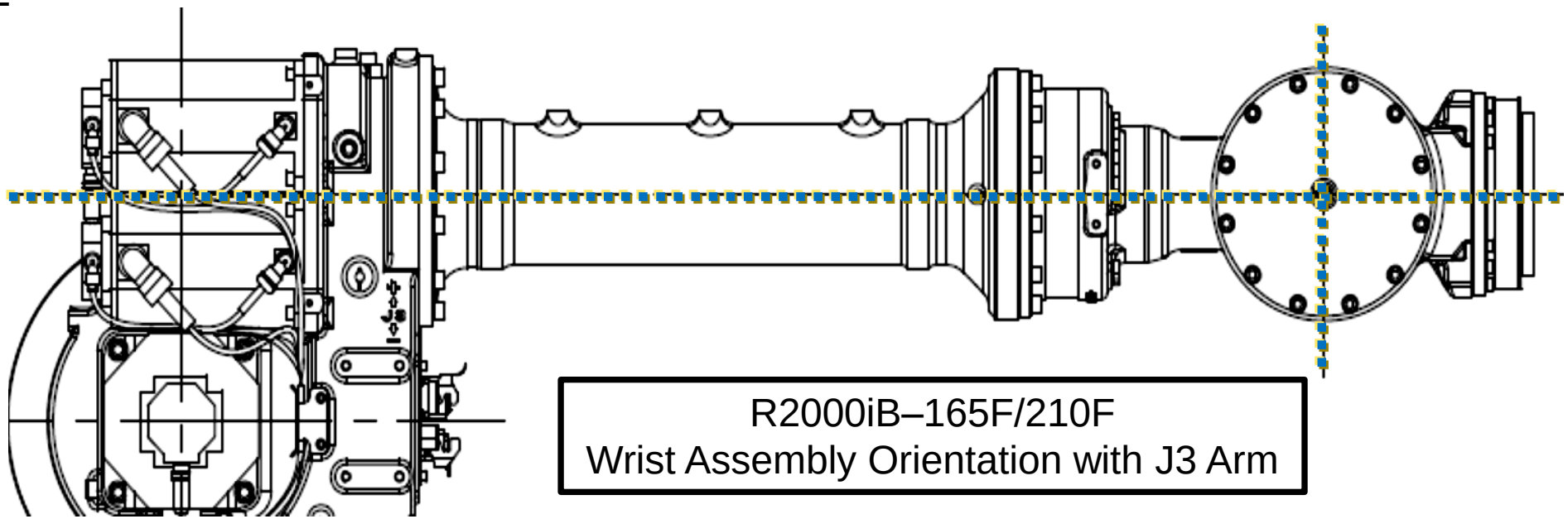

R2000iB–165F/210F
Wrist Assembly Orientation with J3 Arm

R2000iB/210x & R2000iB/165x Wrist Unit mounting Orientation to J3 Arm

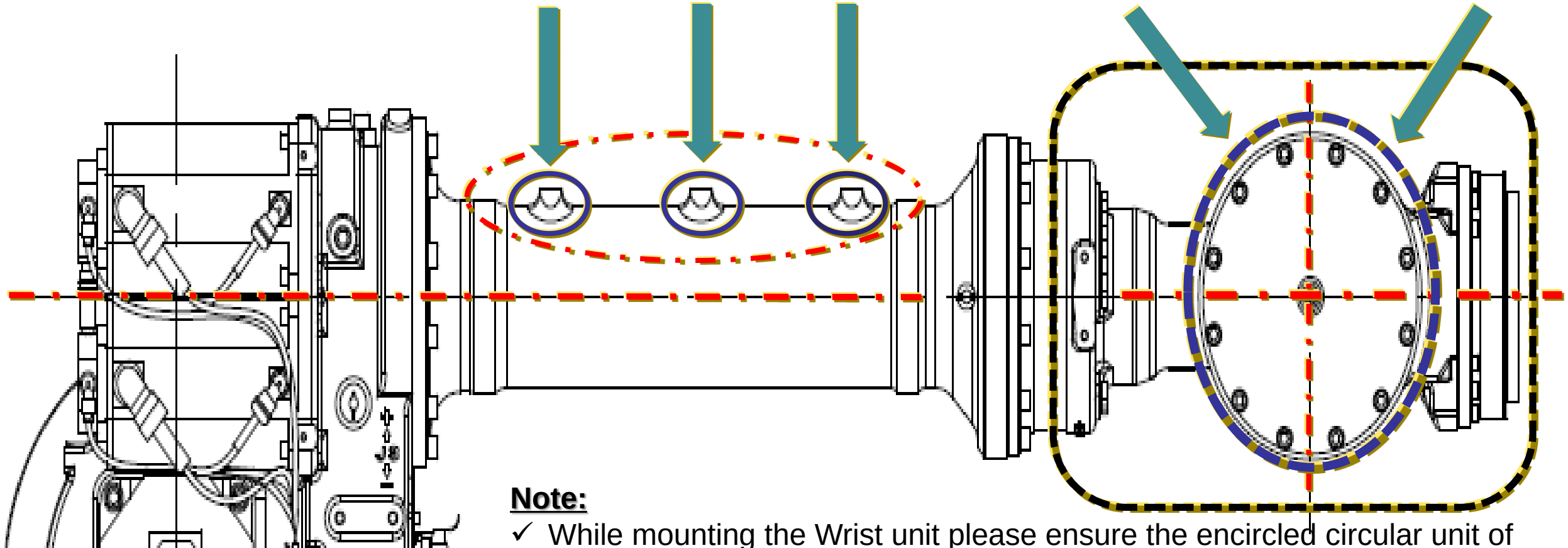

Note:

- ✓ While mounting the Wrist unit please ensure the encircled circular unit of the **Wrist** is placed perpendicular to J3 arm high **lighted projection**
- ✓ View from front flange of Wrist unit, the highlighted circular part on the Wrist unit will be on LHS
- ✓ The mounting screws of the Wrist unit will not allow to fix the wrist unit in wrong orientation and only possible mountings are 0 & 180$^{\theta}$

R2000iB/210x & R2000iB/165x Wrist Unit Assembly Parts

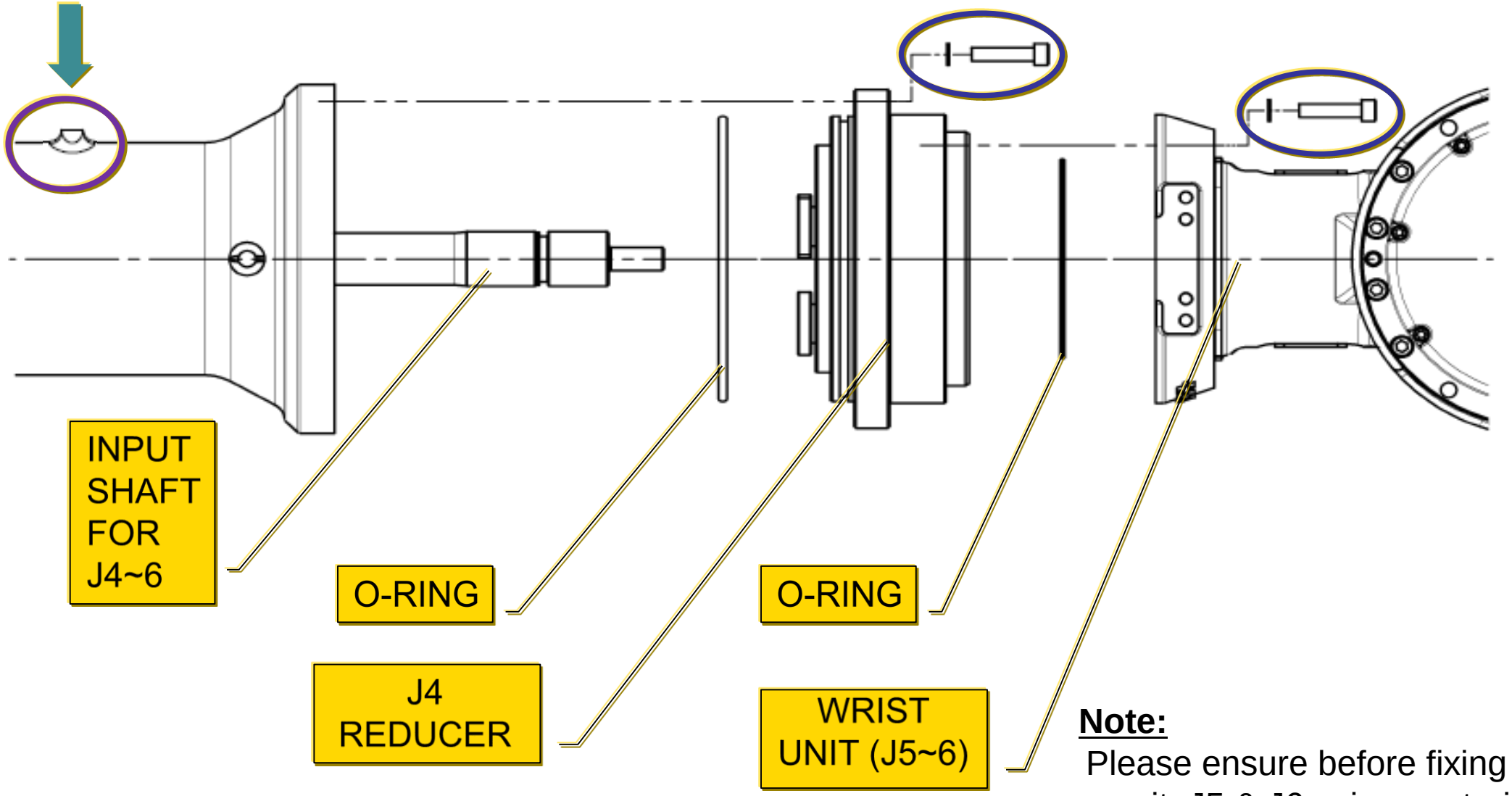

Note:

Please ensure before fixing the Wrist unit, J5 & J6 axis are straight and perpendicular to J4 axis

R2000iB/210x & 165x Wrist Unit Flange

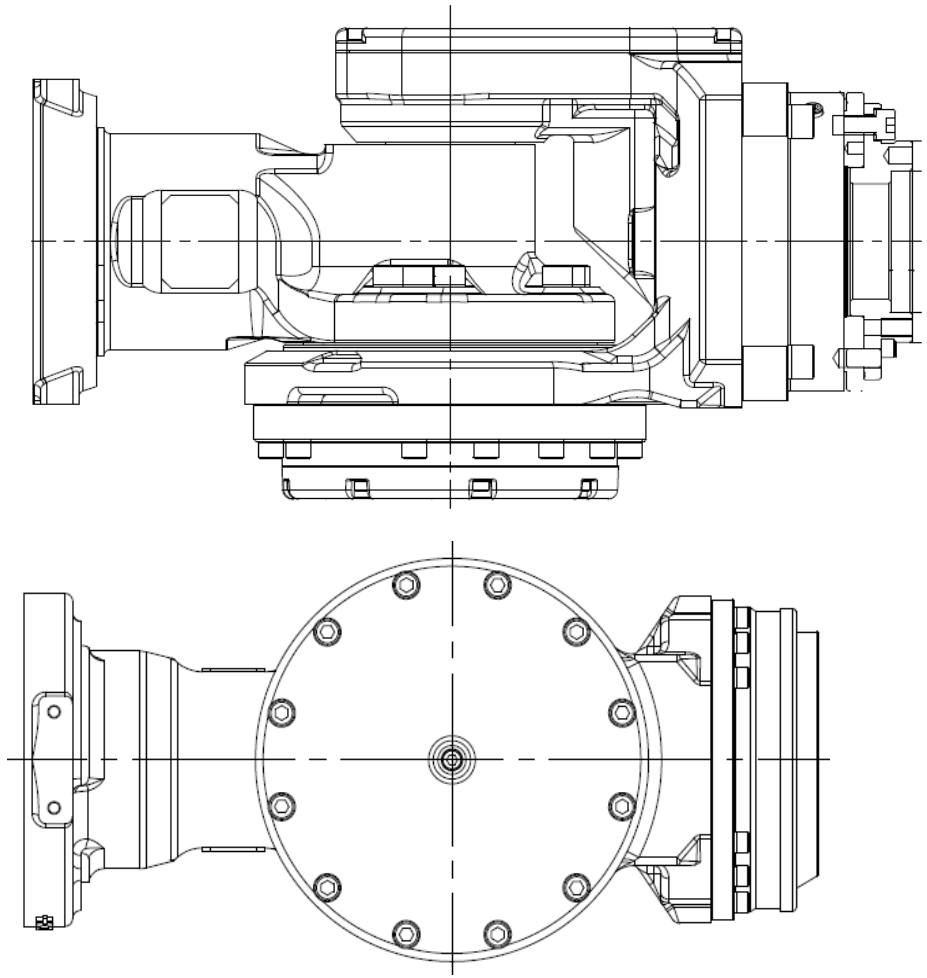

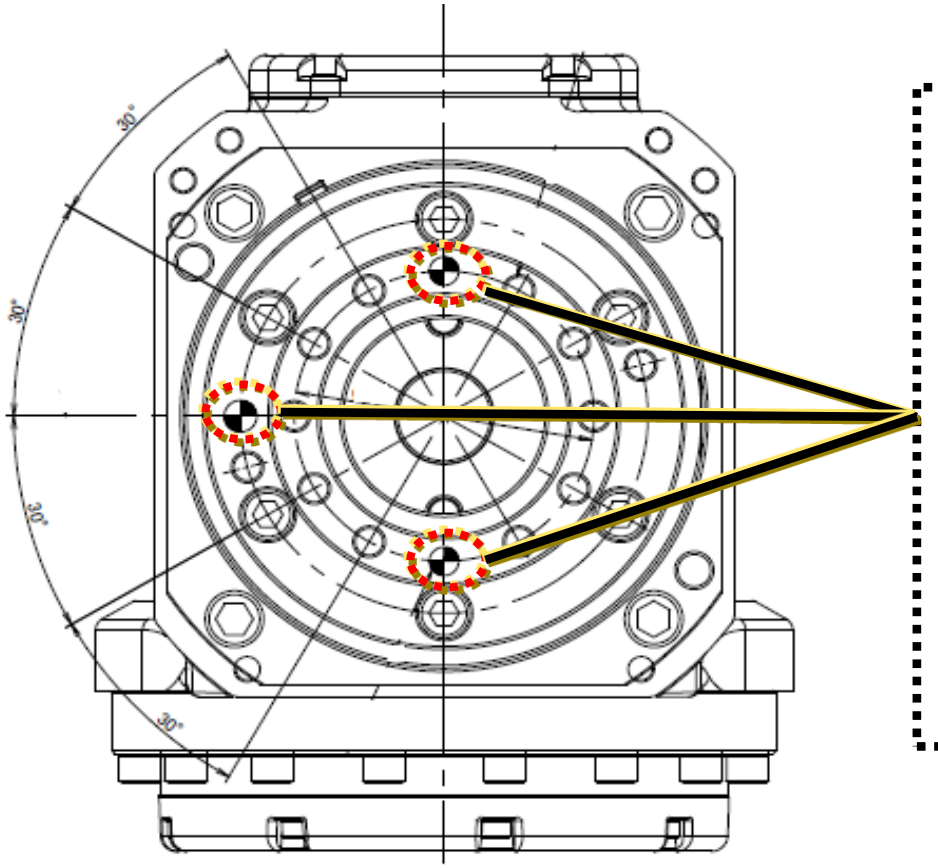

Use the 3 Location Dowel Pin to Orient and fix the EOT (End of Arm Tooling) to the Front flange of Wrist unit

Thank you for your Attention